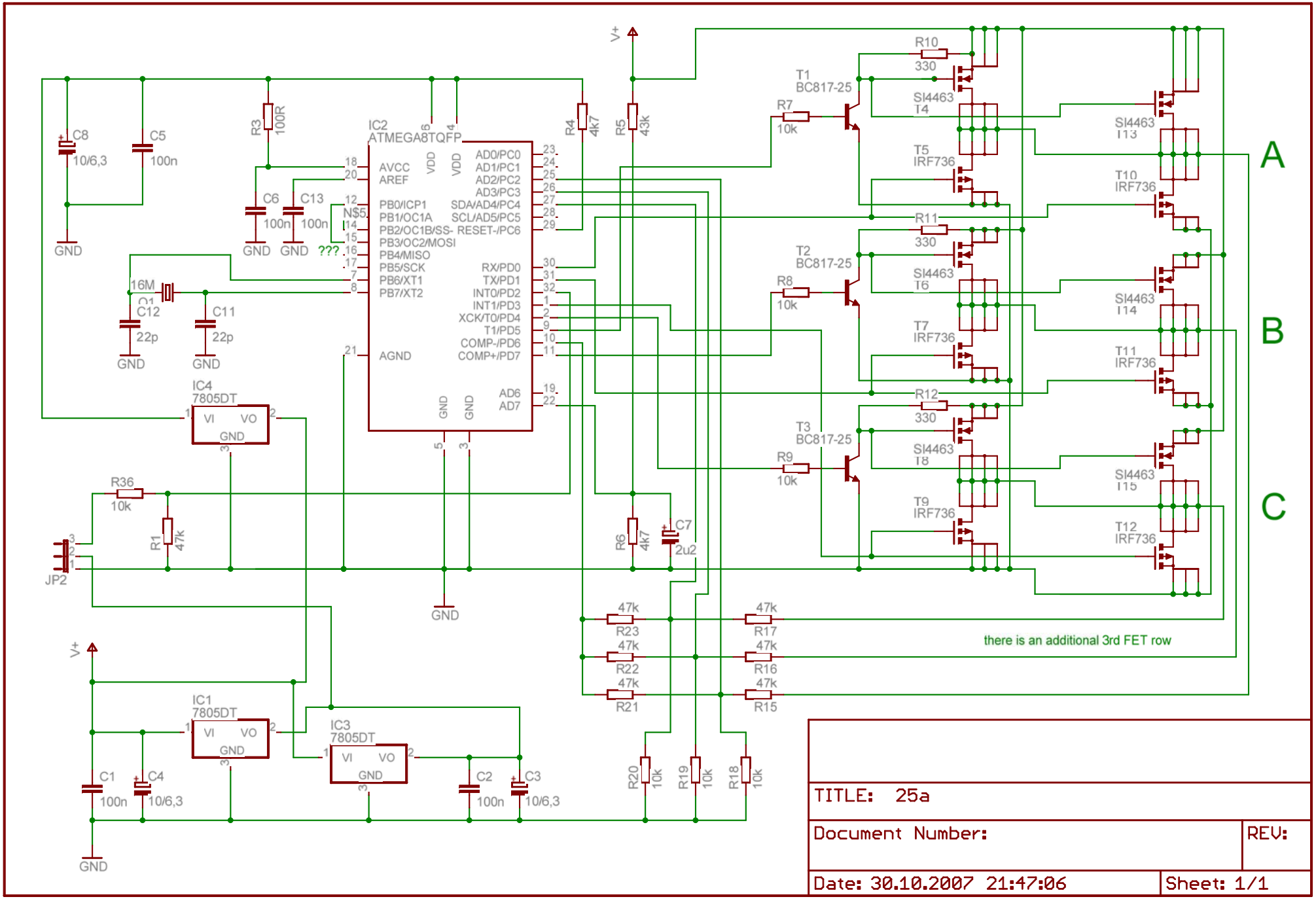

TITLE: 25a

Document Number:

REV:

Date: 30.10.2007 21:47:06

Sheet: 1/1