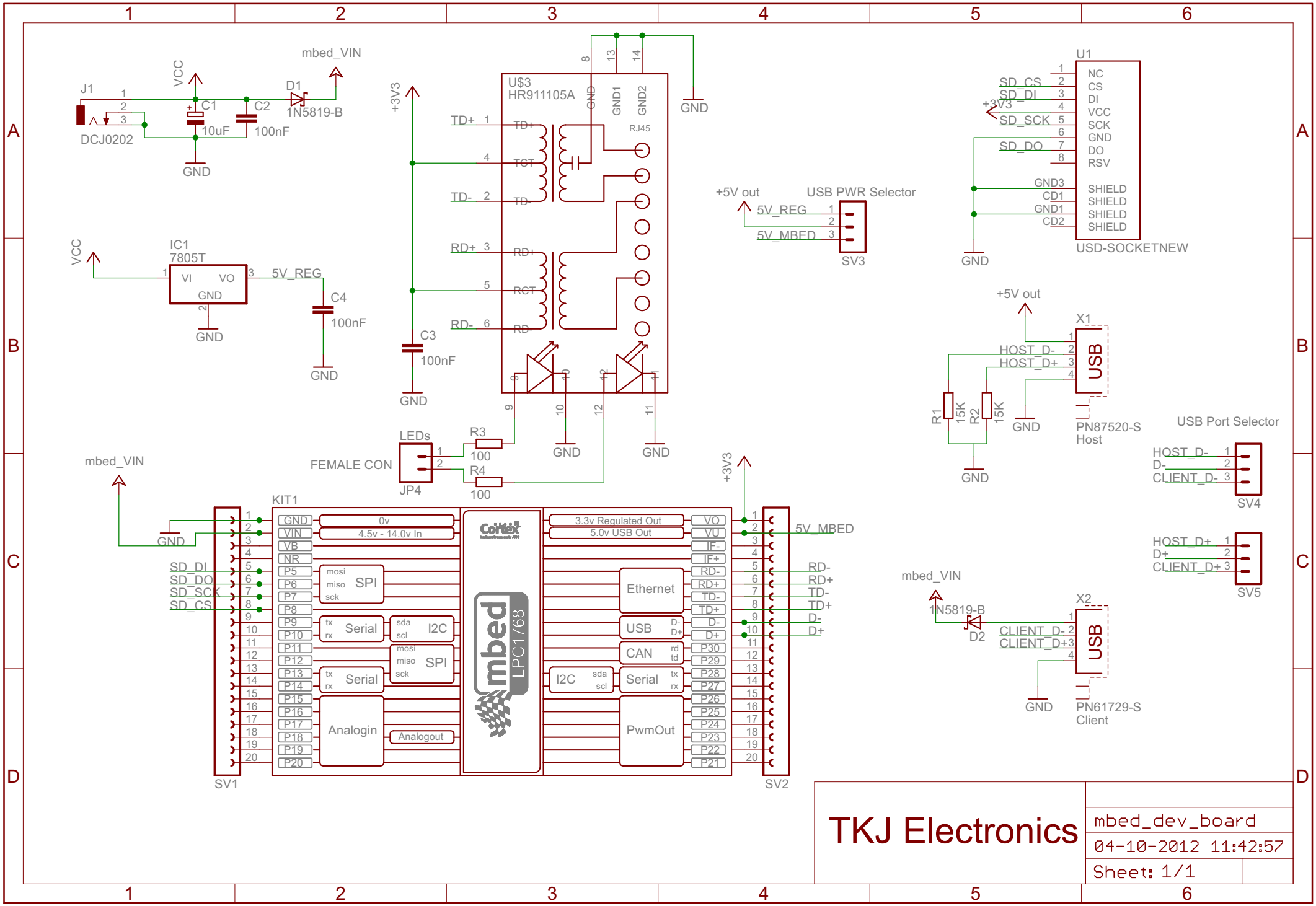

TKJ Electronics

mbed_dev_board

04-10-2012 11:42:57

Sheet: 1/1